FREE PLAN

8' x 8' Storage Shed

Step-by-step build plan with dimensioned drawings

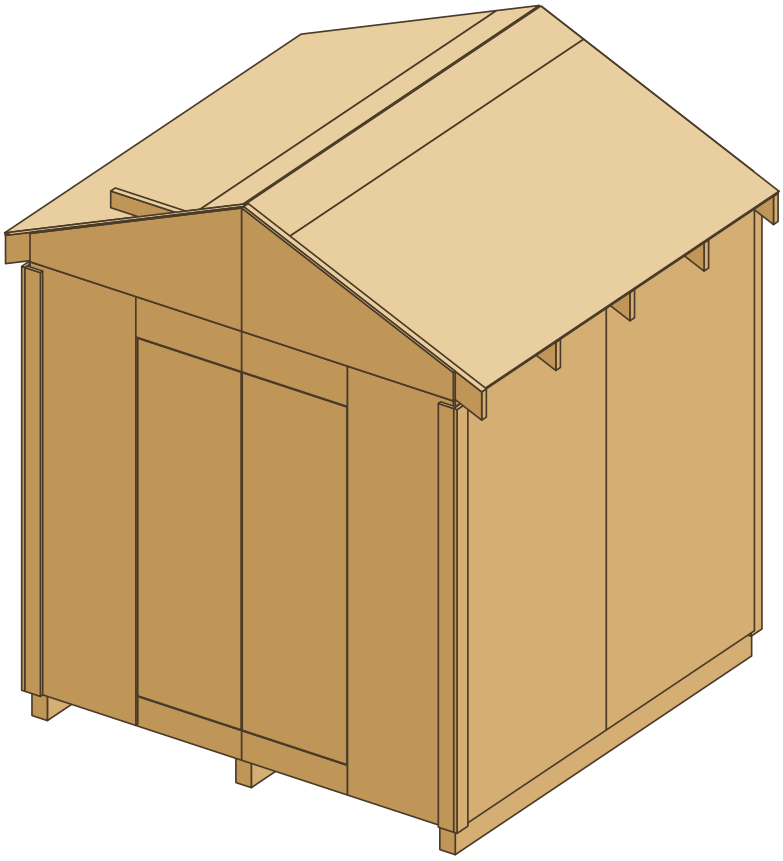

Floor size	8'-0" x 8'-0" (64 sq ft)
Overall	9'-0" wide x 8'-2-3/4" deep x 10'-2-1/4" high
Walls	84" framed, 2x4 studs at 16" centres
Roof	gable, 5 in 12, 2x6 rafters at 24" centres, 6" overhang
Door	double doors, 48" wide x 75-1/2" high opening
Foundation	3 4x6 skids on concrete blocks over a gravel pad
Plan ID	SH-96x96

Not engineered. Check local codes. Build at your own risk. These plans show one way to build this project. They are not reviewed by a licensed professional. You are responsible for checking local rules, your materials and your own safety.

Free vs Premium

This free plan has everything you need to build the shed. The Premium plan adds the shopping list and the cut planning for every board and sheet, so you buy the right materials the first time.

What you get	Free	Premium
Step-by-step instructions	17 steps	21 steps
Cut length for every board (in the steps)	✓	✓
Elevations and framing drawings with dimensions	✓	✓
3-D assembly figure for each build step	✓	✓
Exploded assembly view with part legend	—	✓
Full cut list table (part, qty, length, stock)	—	✓
Board-by-board cutting diagram for 8-16 ft stock	—	✓
Plywood and T1-11 sheet layouts (4x8)	—	✓
Shopping list: boards, sheets, shingles, waste %	—	✓
Nail, hardware and gravel quantities	—	✓
Tools list, finish guide, anchoring and setup	—	✓

Get the Premium plan — $19.99

One-time purchase. Instant PDF download.

Need a different size?

We generate this shed in other sizes too (8x8 up to 12x20), with every drawing, the cut list and the shopping list recalculated for the new size.

Drawings · elevations

FRONT ELEVATION (door end)

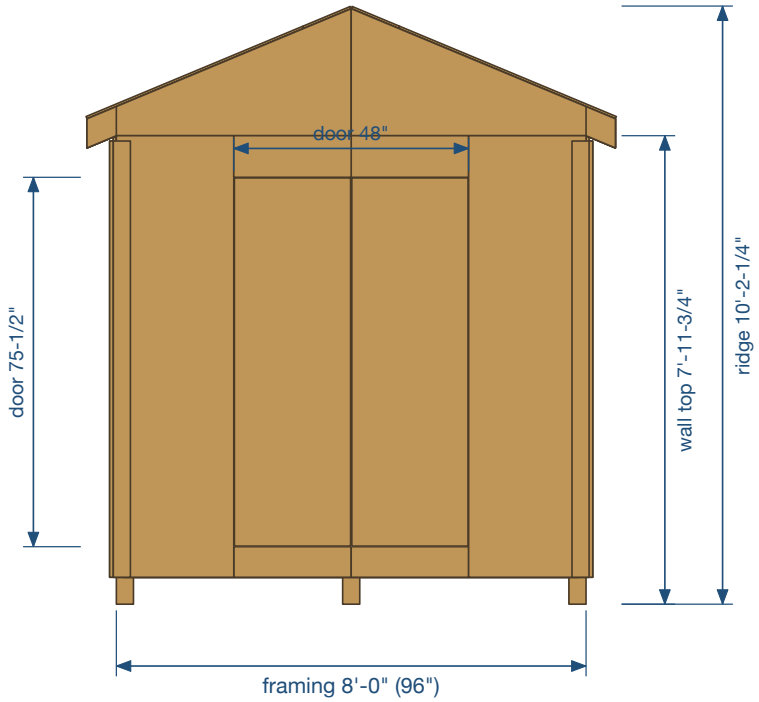

RIGHT SIDE ELEVATION

gable roof 5 in 12

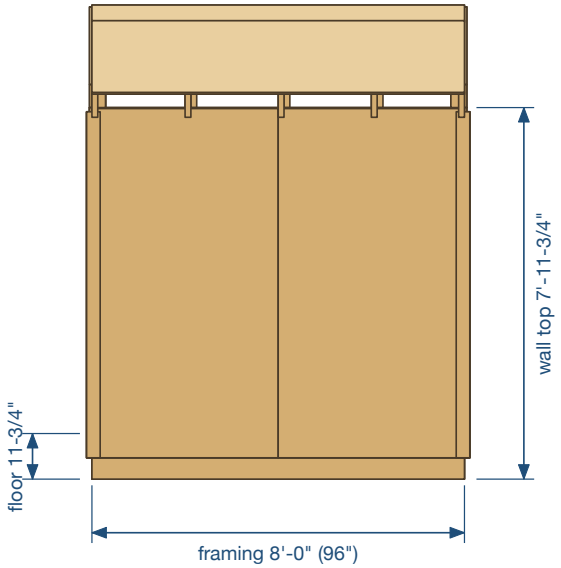

Drawings are not to scale. Build from the written dimensions.

Drawings · floor and roof framing

FLOOR FRAMING PLAN (from above, floor removed)

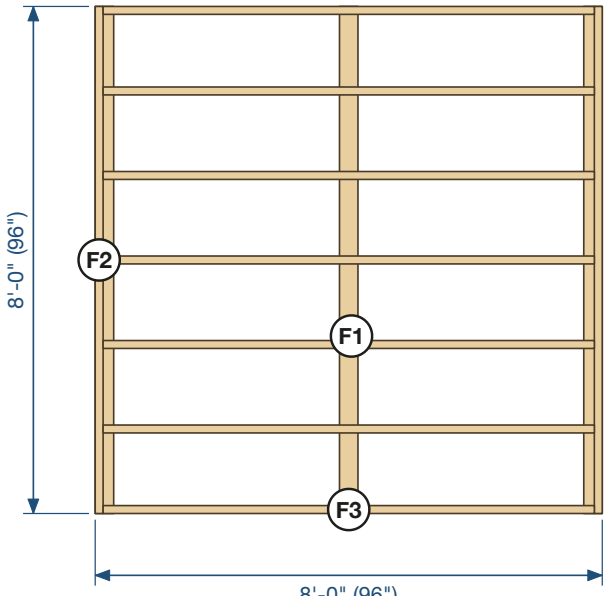

skids centred at 1-3/4", 48", 94-1/4" from the left; joists at 16" centres

ROOF FRAMING PLAN (from above, roof deck removed)

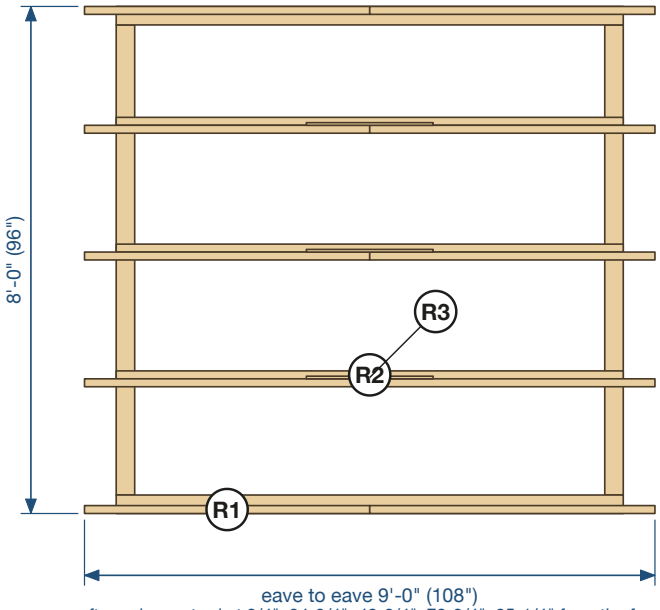

rafter pairs centred at 3/4", 24-3/4", 48-3/4", 72-3/4", 95-1/4" from the front

Drawings · wall framing

FRONT WALL AND GABLE FRAMING (seen from outside)

gable studs W12-W13: top cut to the roof slope, lengths in the cut list

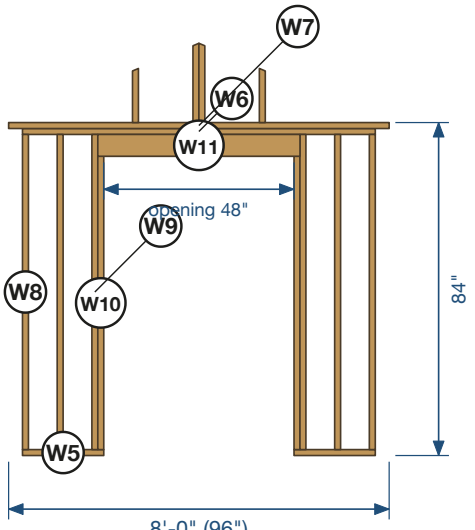

stud centres: 4-1/4", 13", 21-3/4", 23-1/4", 72-3/4", 74-1/4", 83", 91-3/4"

BACK WALL AND GABLE FRAMING (seen from outside)

gable studs W12-W13: top cut to the roof slope, lengths in the cut list

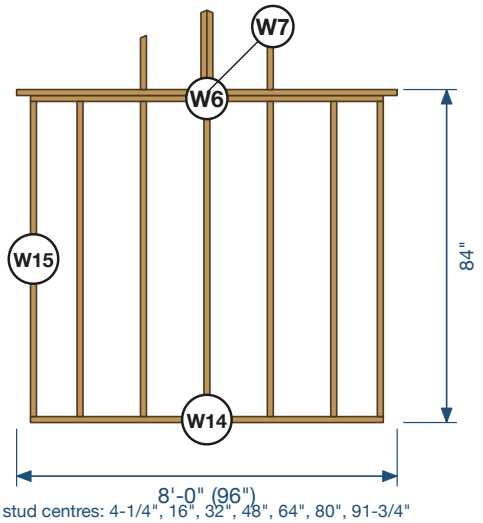

stud centres: 4-1/4", 16", 32", 48", 64", 80", 91-3/4"

Drawings · wall framing (continued)

SIDE WALL FRAMING (seen from outside)

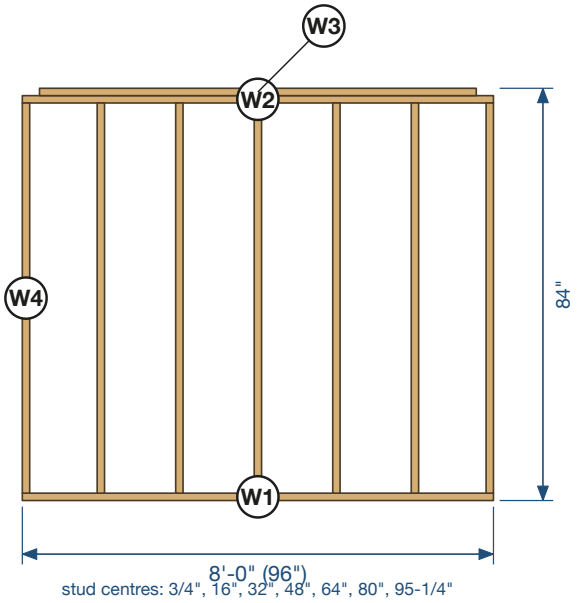

Part key

Every part has a code. The first letter is the assembly: F floor and skids, W walls and gables, R roof, S siding, D doors, T trim.

Part	Name	Stock
F1	Skid	4x6
F2	Rim joist	2x6
F3	Floor joist	2x6
F4	Floor panel	3/4" plywood
W1	Side wall bottom plate	2x4
W2	Side wall top plate	2x4
W3	Side wall upper top plate	2x4
W4	Side wall stud	2x4
W5	Front wall bottom plate	2x4
W6	Gable wall top plate	2x4
W7	Gable wall upper top plate	2x4
W8	Front wall stud	2x4
W9	King stud	2x4
W10	Jack stud	2x4
W11	Door header	2x6
W12	Gable stud	2x4
W13	Gable stud	2x4
W14	Back wall bottom plate	2x4

Part	Name	Stock
W15	Back wall stud	2x4
R1	Rafter	2x6
R2	Rafter tie	2x4
R3	Ridge gusset	1/2" plywood
R4	Roof deck panel	1/2" plywood
R5	Roof deck panel	1/2" plywood
S1	Side siding panel	5/8" T1-11 siding panel
S2	Front siding beside door	5/8" T1-11 siding panel
S3	Front siding below door	5/8" T1-11 siding panel
S4	Front siding above door	5/8" T1-11 siding panel
D1	Door leaf	5/8" T1-11 siding panel
S5	Gable siding	5/8" T1-11 siding panel
S6	Back siding panel	5/8" T1-11 siding panel
D2	Door stile	1x4
D3	Door rail	1x4
T1	Corner board, gable face	1x4
T2	Corner board, side face	1x4

Build steps

1 Prepare the site

- Pick a level, well-drained spot with room to swing the doors. Check local rules on setbacks and on sheds of this size (64 sq ft) before you start.
- Dig out a pad 1 ft bigger than the shed on every side (10'-0" x 10'-0"), lay landscape fabric and spread about 1.4 cu yd of crushed gravel 4" deep. Rake it level and tamp it hard.
- Set 9 solid concrete blocks in 3 rows under the skid lines, every 4 ft, level with each other (use a string line and a level).

2 Cut the framing

Cut every board to length before assembly and label each piece with its part code.

- 3 x skid (F1): 4x6, cut to 96" (ground-contact rated, on edge) (a full 8'-0" board)
- 2 x rim joist (F2): 2x6, cut to 96" (a full 8'-0" board)
- 7 x floor joist (F3): 2x6, cut to 93"
- 2 x side wall bottom plate (W1): 2x4, cut to 96" (a full 8'-0" board)
- 2 x side wall top plate (W2): 2x4, cut to 96" (a full 8'-0" board)
- 2 x side wall upper top plate (W3): 2x4, cut to 89"
- 14 x side wall stud (W4): 2x4, cut to 79-1/2"
- 2 x front wall bottom plate (W5): 2x4, cut to 20-1/2" (stops at the door opening)
- 2 x gable wall top plate (W6): 2x4, cut to 89"
- 2 x gable wall upper top plate (W7): 2x4, cut to 96" (laps over the side walls) (a full 8'-0" board)
- 4 x front wall stud (W8): 2x4, cut to 79-1/2"
- 2 x king stud (W9): 2x4, cut to 79-1/2"
- 2 x jack stud (W10): 2x4, cut to 74"
- 2 x door header (W11): 2x6, cut to 51" (2 plies, on edge)
- 4 x gable stud (W12): 2x4, cut to 13-5/8" (top cut at 5 in 12)
- 4 x gable stud (W13): 2x4, cut to 20" (top cut at 5 in 12)
- 1 x back wall bottom plate (W14): 2x4, cut to 89"
- 7 x back wall stud (W15): 2x4, cut to 79-1/2"
- 10 x rafter (R1): 2x6, cut to 60-13/16" (plumb cut both ends, 5 in 12)
- 3 x rafter tie (R2): 2x4, cut to 96" (on edge, beside the rafters) (a full 8'-0" board)
- 4 x door stile (D2): 1x4, cut to 74-3/4"
- 6 x door rail (D3): 1x4, cut to 16-1/4"
- 4 x corner board, gable face (T1): 1x4, cut to 89-3/16"
- 4 x corner board, side face (T2): 1x4, cut to 89-3/16"

Square both ends of every board with a speed square before measuring. Rafters and gable studs get angled cuts; mark them from the drawings.

Build steps (continued)

3 Lay the skids

- Lay the 3 skids (F1) on edge on the blocks, running front to back, with their centres at 1-3/4", 48", 94-1/4" from the left edge. The outside faces of the outer skids line up with the outside of the floor frame.
- Check that the skids are level along their length and with each other, and that the diagonals of the outer skid ends match. Shim with solid shims, never with wood scraps.

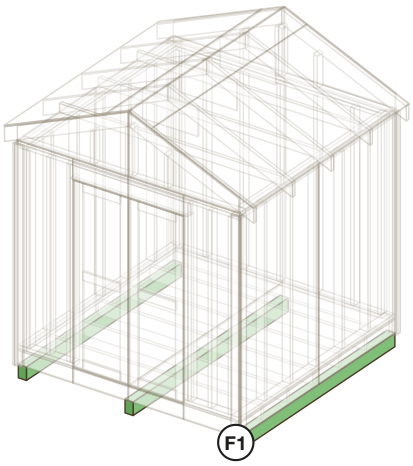

Green: parts added in this step. Faint outline: parts added later.

4 Build the floor frame

- Stand the two rim joists (F2) on edge, 96" apart outside to outside.
- Fit the floor joists (F3) between them: one flush with each end and the rest centred at 16", 32", 48", 64", 80" from the front.
- Nail through the rims into each joist end with 3 16d nails. Check that both diagonals read 11'-3-3/4".
- Set the frame on the skids, square it, and toe-nail each joist to every skid it crosses.

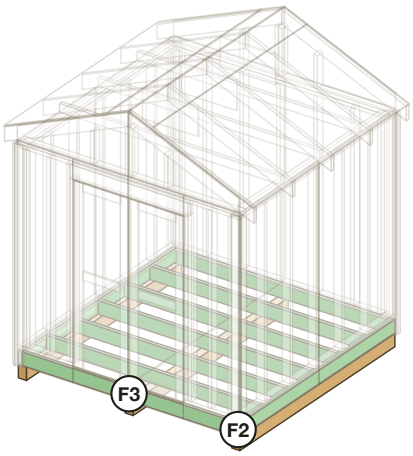

Green: parts added in this step. Faint outline: parts added later.

Build steps (continued)

5 Lay the floor

- Nail down the 3/4" plywood floor (F4), long edges running front to back.
- Use 8d ring-shank nails every 6" at the edges and every 12" along the joists. Construction adhesive on the joists stops squeaks.

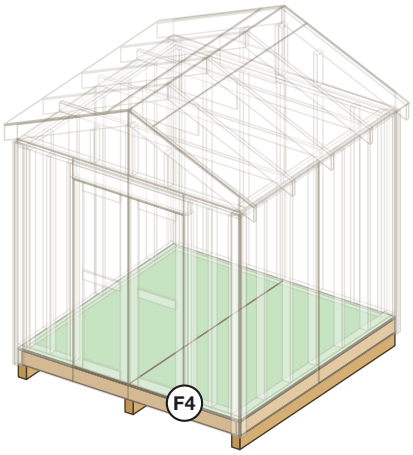

Green: parts added in this step. Faint outline: parts added later.

6 Frame the side walls

- The side walls run the full 8'-0" depth. Each has a bottom plate, a top plate and an upper top plate (W1, W2, W3).
- Studs (W4, 79-1/2" long) are centred at 3/4", 16", 32", 48", 64", 80", 95-1/4" from the front end.
- Leave the upper top plate off for now: it goes on after the walls are standing. It stops 3-1/2" short of each end so the gable walls' upper plates lap over it.
- Nail through the plates into each stud end with 2 16d nails.

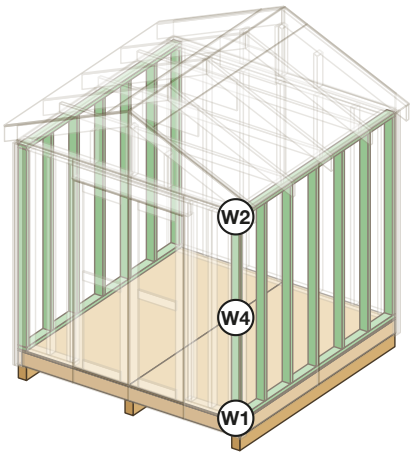

Green: parts added in this step. Faint outline: parts added later.

Build steps (continued)

7 Frame the front wall

- The front wall fits between the side walls (89" long). Lay out the bottom plate and top plate (W5, W6).
- Door rough opening: 48" wide, from 24" to 72" measured from the left outside edge of the shed, and 75-1/2" high from the floor.
- Each side of the opening gets a king stud (W9) and a jack stud (W10). The doubled 2x6 header (W11) sits on the jacks, tight under the top plate.
- Other studs (W8) are centred at 4-1/4", 13", 83", 91-3/4" from the left outside edge.
- The bottom plate stops at the jack studs, so the doorway is open to the floor.

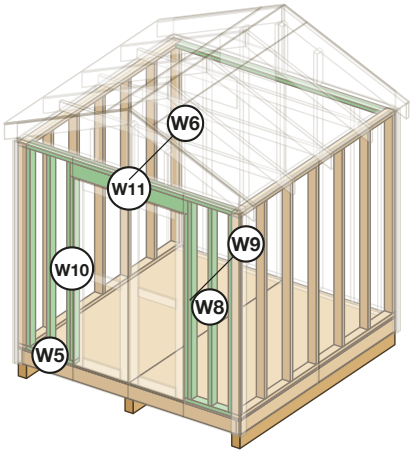

Green: parts added in this step. Faint outline: parts added later.

8 Frame the back wall

- The back wall is the same length with no opening. Studs (W15) are centred at 4-1/4", 16", 32", 48", 64", 80", 91-3/4" from the left outside edge.
- Nail through the plates into each stud end with 2 16d nails.

Green: parts added in this step. Faint outline: parts added later.

Build steps (continued)

9 Raise the walls

- Stand the side walls first, flush with the outside of the floor, then the front and back walls between them.
- Nail the bottom plates down through the floor into the joists and rims, 2 16d nails every 16" (not in the doorway). Nail the corner studs together every 16".
- Plumb each wall with a level and brace it with a temporary diagonal board.
- Nail on the upper top plates (W3, W7): the front and back ones run the full 8'-0" and lap over the side walls; the side ones fill in between. Nail them down every 16".

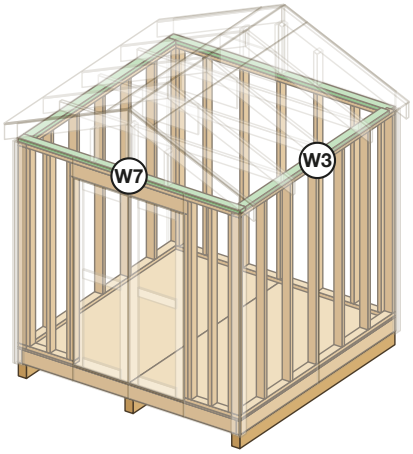

Green: parts added in this step. Faint outline: parts added later.

Build steps (continued)

10 Set the rafters

- Cut a pattern rafter (R1): 60-13/16" long point to long point, plumb cuts at 22.6 degrees at both ends (5 in 12). Test it on the walls, then cut the rest from it.
- Set the rafters in pairs that butt at the ridge, 5 pairs centred at 3/4", 24-3/4", 48-3/4", 72-3/4", 95-1/4" from the front. Each rafter sits on the outer top edge of the side wall and overhangs 6" (measured level).
- Nail a 1/2" plywood gusset (R3) across the ridge joint of every inside pair, and a rafter tie (R2) across the shed beside each inside pair, on top of the wall plates. Nail each tie to both rafters with 3 16d nails.
- Fix every rafter to the top plate with a hurricane tie. The end pairs stand flush with the outside of the front and back walls.

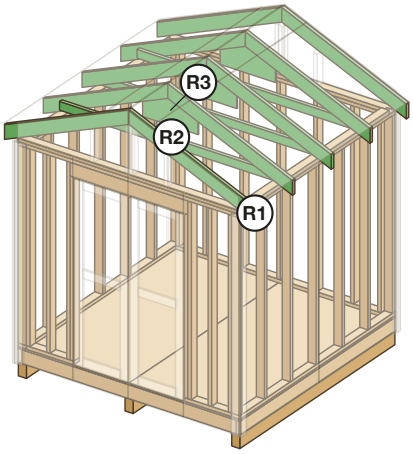

Green: parts added in this step. Faint outline: parts added later.

Build steps (continued)

11 Frame the gables

- Fill the triangles above the front and back walls with gable studs (W12, W13), standing on the upper top plate under the end rafters, centred at 32", 47-1/4", 48-3/4", 64" from the left outside edge.
- Cut the top of each to the roof slope (5 in 12, 22.6 degrees) so it fits tight under the rafter. The two centre studs meet under the ridge and back the gable siding joint.

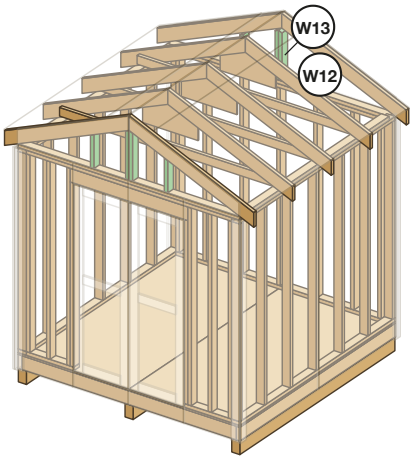

Green: parts added in this step. Faint outline: parts added later.

12 Sheath the roof

- Nail the 1/2" plywood roof deck (R4, R5) to the rafters, starting with a full row at the eave. The end joints land on rafters; put H-clips on the joints between rafters.
- The deck stops flush with the outside faces of the end rafters and covers the rafter tails; the drip edge on the rakes covers the top edge of the gable siding. Nail every 6" at the edges and 12" in the field.

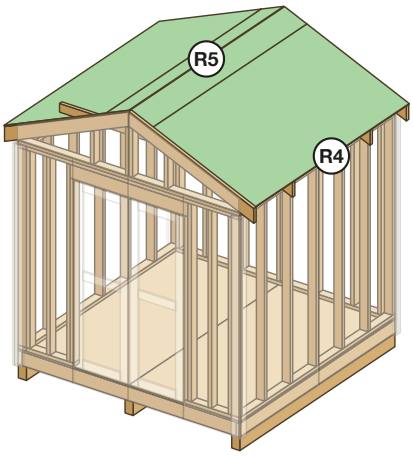

Green: parts added in this step. Faint outline: parts added later.

Build steps (continued)

13 Roof it

- Nail drip edge along the eaves, lay the underlayment from the bottom up with 2" laps, then drip edge on the rakes over the underlayment.
- Shingle from the eave up, following the shingle maker's instructions for 5 in 12 (about 3 bundles). Finish the ridge with ridge cap shingles.

14 Side siding

- Nail the T1-11 panels (S1) on both side walls, grooves vertical, from the bottom of the rim joist up to the top plate. Panel joints land on the studs at 48".
- Leave a 1/8" gap at every joint. Nail every 6" at the edges and every 12" into the studs.

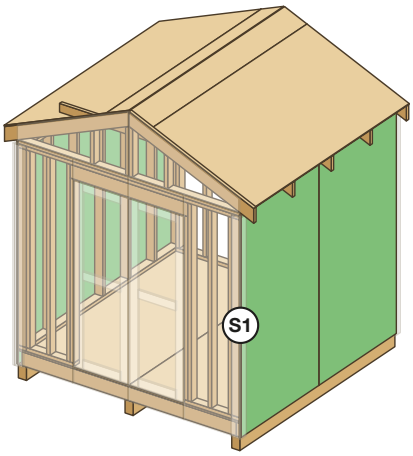

Green: parts added in this step. Faint outline: parts added later.

Build steps (continued)

15 Front, back and gable siding

- On the front and back walls the panels run from the bottom of the rim up to the top plate, with joints on the studs at 48".
- Before you hang the front panels, mark the door opening on them (48" wide, 75-1/2" high, from the floor) and cut it out with a circular saw and a jigsaw. Keep the cut-out pieces: they become the two door leaves (D1).
- Nail Z-flashing along the top of the lower panels, then cut the gable pieces: the two halves of each gable nest on one sheet. Nail them from the flashing up to the underside of the roof deck.

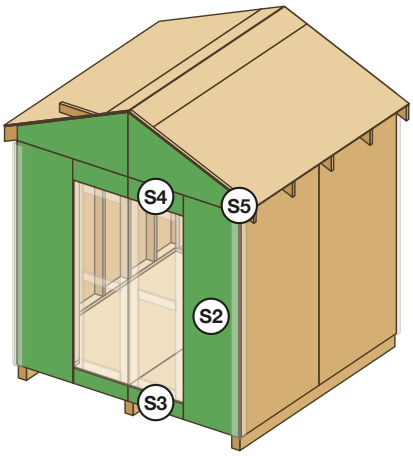

Green: parts added in this step. Faint outline: parts added later.

16 Build and hang the doors

- Trim 1/8" off every edge of the door leaves (D1) so they swing clear. Screw the 1x4 battens (D2, D3) to the inside face of each leaf: a stile on each side and rails at the top, middle and bottom.
- Hang each leaf on 3 T-hinges screwed through the siding into the king and jack studs. Fit a handle and a hasp, and a cane bolt into the floor on the leaf that stays shut.

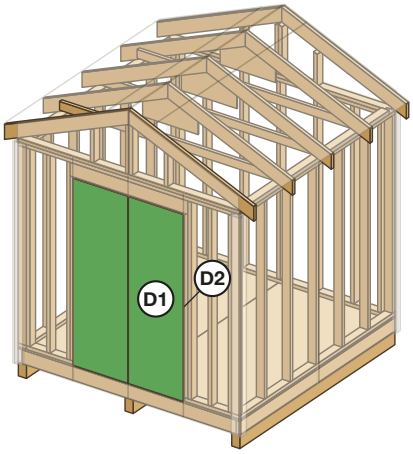

Green: parts added in this step. Faint outline: parts added later or drawn see-through.

Build steps (continued)

17 Corner boards

- Nail a 1x4 corner board (T1, T2) on each face of every corner, from the bottom of the siding up to the eave. They cover the panel edges at the corners.
- Caulk the corner boards and around the door trim.

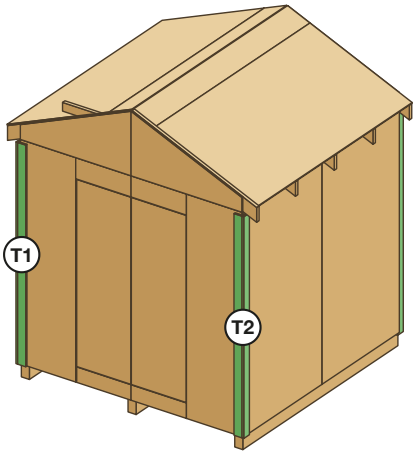

Green: parts added in this step. Faint outline: parts added later.

Free vs Premium

This free plan has everything you need to build the shed. The Premium plan adds the shopping list and the cut planning for every board and sheet, so you buy the right materials the first time.

What you get	Free	Premium
Step-by-step instructions	17 steps	21 steps
Cut length for every board (in the steps)	✓	✓
Elevations and framing drawings with dimensions	✓	✓
3-D assembly figure for each build step	✓	✓
Exploded assembly view with part legend	—	✓
Full cut list table (part, qty, length, stock)	—	✓
Board-by-board cutting diagram for 8-16 ft stock	—	✓
Plywood and T1-11 sheet layouts (4x8)	—	✓
Shopping list: boards, sheets, shingles, waste %	—	✓
Nail, hardware and gravel quantities	—	✓
Tools list, finish guide, anchoring and setup	—	✓

Get the Premium plan — $19.99

One-time purchase. Instant PDF download.

Need a different size?

We generate this shed in other sizes too (8x8 up to 12x20), with every drawing, the cut list and the shopping list recalculated for the new size.

About this plan

Not engineered. Check local codes. Build at your own risk.

All dimensions, the cut list and the shopping list in this plan are calculated from the size you chose. They were not test-built at this exact size. Measure your actual lumber before cutting, because dressed sizes vary between mills and stores.

Lumber and plywood sheets can be heavy. Lift with help, wear eye protection when cutting, and follow your tool manufacturer's instructions.

This plan is for personal use. Please do not resell or redistribute it.

© 2026 Yard Build Plans · yardbuildplans.com · SH-96x96 · Free edition